JOURNAL OF CRITICAL REVIEWS

ISSN- 2394-5125 VOL 08, ISSUE 03, 2021

Conception and Influence of Students Reasoning relating to sound waves

Pawanjit Kaur[1], Narinder Kumar[2]

[1,2]Guru Kashi University, Talwandi Sabo

Abstract

The development and design of group-learning classroom resources that depend on explicit inquiries into student knowledge can aid student learning of sound waves. We define thinking as far as sets of assets, which are assembled fabricating squares of thought that are utilized in an assortment of settings. In our college physical science classes, understudies every now and again utilized sets of assets that were not equivalent to the ones we believed them should utilize. We further develop understudy appreciation of sound waves by giving educational program assets that get some information about material science according to an alternate point of view.

By concentrating on a locally significant ecological issue, the prospering discipline of metropolitan nature can possibly draw in metropolitan youths in logical cycles. Keeping that in mind, we're making curricular modules that utilize arising data advancements to connect with kids in science study. The impact of one of the planned courses, metropolitan bird bioacoustics, on understudies' appreciation of sound is portrayed in this research.

Keywords: Sound Waves, Students Reasoning, Model of Student Learning, Student Reasoning.

1. Introduction

Curriculum development programmes based on research have been viewed as supportive in helping understudies in acquiring an applied comprehension of an assortment of physical science points (McDermott and Redish, 1999). While portraying the outcome of a few of these assets, specific consideration is paid to the exceptional parts of understudy examinations at the creating school. Educators craving to utilize research-based materials in different areas might require extra information to help them upgrade their own instructing. These perusers might need a more extensive outline of how different showing approaches are picked in association with the examination's particular challenges. Hypothetical techniques that impact educational program creation might be as pertinent to such a crowd of people as the exact assignments put into study hall materials and the particular examination information on which they are based. Two elements are expected to illuminate these educators on the most proficient method to move toward understudies in the homeroom and perceive understudy thinking not especially examined in this paper: a total image of understudy handle of the mechanics of sound waves and a refined model of learning. This double strategy is talked about with regards to understudy learning of sound wave material science.

In spite of the way that the physical science of sound is much of the time instructed in college physical science starting courses, understudy information on this difficult theme has been researched just inconsistently. Numerous understudies can't get a handle on customary understandings of sound waves, can't represent the hidden wave model of sound, or have no strong model of the physical science, as per Cedric Linder and accomplices' discoveries (Linder and Erickson, 1989; Linder, 1992, 1993). These discoveries are in accordance with discoveries from physical science schooling research in numerous different areas of basic (McDermott, 1991; Beichner, 1994) and progressed physical science (McDermott, 1991; Beichner, 1994).

(Steinberg, Oberem, and McDermott, 1996). We expand on their work, zeroing in specifically on how a learning model assists us with getting a handle on their thinking.

As per current science instruction developments, each understudy ought to be engaged with concentrating on the normal world consistently and in manners that are like the way in which researchers work (American Association for the Advancement of Science 1993). Nonetheless, there are extensive contrasts in the sorts of science encounters that metropolitan and rural children have. Numerous metropolitan science educators miss the mark on schedule, ability, or materials important to connect with their fluctuated understudy populaces in intellectually adequate logical exercises (Cawley et al. 2003). Because of these and different cutoff points, numerous metropolitan instructors answer these issues by embracing entire class showing systems, for example, addresses, concentrate on helps, bunch perusing, and worksheet finish (National Educational Goals Panel 1999; Wenglinsky and Educational Testing Service 2000).

It is indispensable to perceive and address understudies' ongoing information to form their fundamental information into deductively adequate seeing appropriately. During the showing system, we might expect to supplant current unconstrained reasoning, revamp it, or refine and expand on it, as indicated by different speculations of calculated change. Among the numerous assorted kinds of understudy difficulties, those that come from an organized mental thought or mental model are of specific pertinence in material science instruction.

2. Model Of Student Learning

Our conversation is directed by a particular model of understudy thinking. We break down understudy thinking in this worldview as far as the frequently sensible natural material science that they bring to class (Hammer, 2000). In the field of wave material science, we've found that understudies often reason by zeroing in altogether on the framework's article like elements (Wittmann, 2001). At the point when understudies recognize different visual and numerical hints with object ascribes instead of wave properties, this center coordinates their thinking in original circumstances. Numerous understudies accept that wave proliferation not set in stone by the power used to create the wave, that superposition just happens at a solitary spot, and that waves conflict when they meet (or bouncing off surfaces). They're utilizing thinking assets that are suitable for objects and their movement, focus of mass, and associations, individually (for example impacts). The language of learning hypothesis is presented in this part of the message to help us in deciphering the results. We momentarily frame one understudy thinking model that helps us in figuring out our information (diSessa and Sherin, 1998, diSessa, 1993). These thoughts are vigorously impacted by Hammer and expand on recently distributed depictions (Wittmann et al., 1999; Wittmann, 2001). (Hammer, 2000).

This part's goal is to show that introducing material science according to the point of view of how we fathom and ponder our general surroundings is applicable and imperative to how we approach understudies in our homerooms. We want to remove a couple of general directing parts and thoughts from endeavors to build more exhaustive speculations that can assist teachers with better comprehension how to apply and grasp the functions of change educational plans.

3. Application of model of learning to sound waves

The subject of engendering is of exceptional importance to this paper. Object proliferation (for instance, a tossed ball) and wave spread (for instance, a sound wave) are the two terms used to depict development starting with one point then onto the next. Genuinely, a spreading object moves starting with one site then onto the next. A spreading (mechanical) wave is the development of an aggravation starting with one area then onto the next (for instance, a removal from thickness or strain balance in a sound wave). The idea of these two sorts of movement is essentially unique.

ISSN- 2394-5125 VOL 08, ISSUE 03, 2021

Both the movement of a person in the arena and the movement of the wave assume a part in passing development of something starting with one point on then onto the next while depicting the games arena wave. One individual portrays 'the wave' as bridging the arena as though it were a real thing moving starting with one spot then onto the next. It is portrayed as a thing, not an occasion, concerning its area and size. (Might you at any point let me know how large an occasion is?) It isn't clear that this is a spreading occasion of individuals standing up (as those neighboring them rise) and plunking down until the movement of every individual in the wave is satisfactorily perceived (when those close to them sit). The progress from object-like wave to engendering occasion is very straightforward with a games arena wave. On account of their opposite headings, the movements are doubtlessly perceivable. All the more urgently, one may promptly envision oneself taking part, considering a fast change between the envisioned individual movement and the noticed wave movement.

While considering various kinds of movement with regards to sound waves, thinking about various levels of the system's essential. Applying the vital assets in the right way would be essential for an appropriate comprehension of sound waves. Sound waves shift from sports arena waves in that the medium's movement is corresponding to the proliferation course. Besides, on the grounds that the medium isn't quickly perceptible, a conversation of the contrast between medium movement and wave movement is troublesome. Sound insights are hear-able instead of visual. What is moving should be found by implication. Whenever there are no perceptual assets free, figuring out the thing is moving becomes testing.

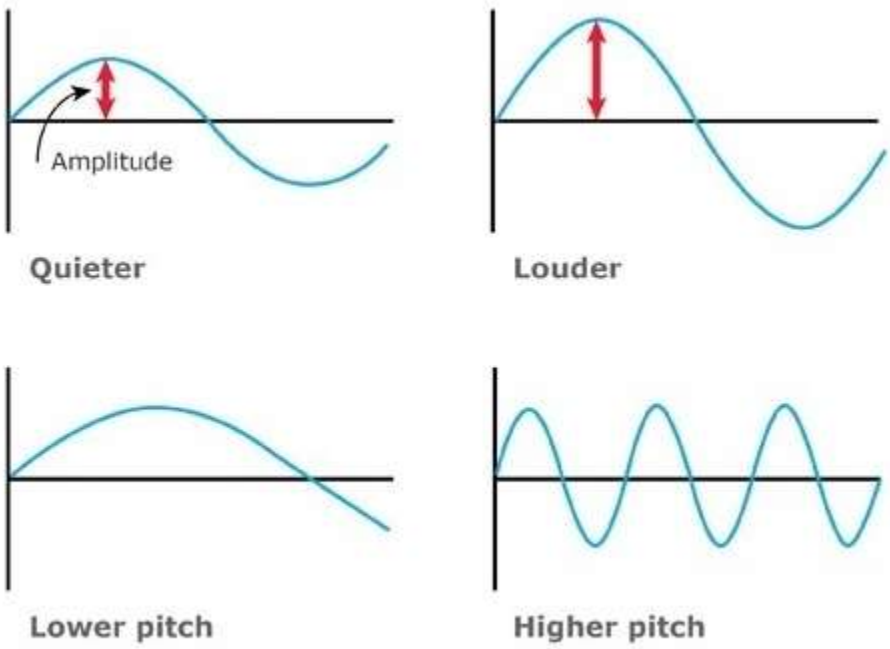

Figure: 1. Visualising Sound Waves.

4. student reasoning

We found that while the fundamental kinds of understudy answers didn't modify over the direction of the semester, the recurrence with which they happened did, generally as per the sort of preparing understudies got on waves. Because of the meetings, we fabricated a comprehension of understudy thinking that was valuable in describing what we saw of understudy thinking consistently during guidance.

ISSN- 2394-5125 VOL 08, ISSUE 03, 2021

To exhibit the variety of understudy thinking, we incorporate longer selections from two meetings. Understudies think regarding things and a progression of occasions, yet they will more often than not center around the framework's article like way of behaving, as per the meetings. We found that most understudies experienced difficulty separating between sound wave spread and the movement of the medium through which it voyages. According to a specialist's point of view, apparently the understudies focus on the pressure period of a sound wave's section through a medium while overlooking the rarefaction stage. Notwithstanding, we contend that since understudies didn't reason using the framework's wave properties, their reasoning cannot simply be characterised from the perspective of an expert physicist.

5. Beats of sound wave

Beats are the intermittent and monotonous changes in the commotion of a sound that happen when two sound waves with very comparative recurrence impact. A beat design is characterized as a wave whose sufficiency changes at a steady rate.

A boisterous sound is heard when productive obstruction creates between two peaks or box. This compares to a beat design top. There is no strong when a damaging obstruction between a peak and a plunge happens. On the beat design, this relates to a place of no uprooting. This beat example would be viable with a wave that differs in volume at a standard rate since there is an unmistakable connection among plentifulness and tumult.

The beat recurrence is the rate at which the uproar is heard fluctuating among high and low levels. The beat recurrence is 10 Hz assuming ten complete patterns of high and low volumes are heard consistently. The distinction in recurrence of the two notes that meddle to deliver the beats is generally equivalent to the beat recurrence. Assuming two sound waves with frequencies of 1000 Hz and 1100 Hz are played simultaneously, a beat recurrence of 100 Hz will be recognised and measured in the temporal domain window of VA.

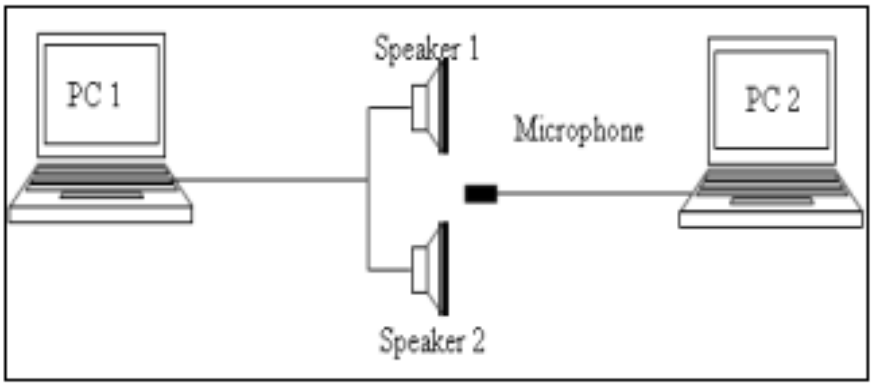

Figure: 2. The demonstration of beats.

6. Student understanding of sound waves

Tables 1 and 2 illustrate results from past semesters' courses and understudy execution when customary guidance. Table 2's third segment portrays understudy execution following Tutorial preparation. Two months after all preparation on waves, understudies were given the post-test question abruptly. It's quite significant

that the tremendous number of understudies who left the inquiry clear is probably inferable from a lack of class time to finish the (ungraded) post-test.

A considerably bigger number of understudies can make sense of the right movement of the swaying dust molecule after the Tutorial. Whenever they didn't characterize the swaying bearing or said the development was in the upward heading, their answers were classed as 'different motions.' Students portraying vertical wavering might battle with the customary portrayals used to portray sinusoidal sine waves, yet their reasoning contrasts from that of understudies depicting a unidirectional power working on the residue molecule.

However the expansion in understudy execution is positive, it isn't really critical. Almost 66% of the understudies who answered the inquiry depicted a longitudinal swaying, yet over 10% portrayed a sound wave that applied a unidirectional pushing force. 7 Even in this way, the discoveries are great while thinking about that understudies were not anticipating the post-test, had not concentrated on the material as of late, and knew that they wouldn't be evaluated on it. We depict similar to inquiries in the accompanying segment that inspected understudies' reasoning on the points in a setting that was impressively unique in relation to the light fire or residue molecule questions. These outcomes likewise showed that students' thinking capacities with respect to sound waves had moved along.

7. Conclusion

We detail how we made informative materials by focusing on the fine-grained thinking highlights that understudies oftentimes use in unseemly circumstances in this work. Understudies utilize a bunch of useful thinking standards to investigate how sound waves collaborate with light articles, which we unequivocally characterize. We trust that by displaying this methodology, not just teachers who could use these assets in the homeroom, yet additionally researchers chipping away at comparable drives, would be better educated.

As indicated by the discoveries, the utilization of data innovation (IT) instruments drew in understudies in the examination of troublesome science points, and they had the option to learn logical substance that was straightforwardly pertinent to their examination. Understudies got a handle on its meaning apparatuses in their request and had the option to apply their insight to finish their concentrate because of metropolitan commotion on birds in their schoolyard successfully.

8. References

[1] McKee, E., Williamson, V. M, and Ruebush, L. E, Effects of a Demonstration Laboratory on Student Learning, J. Sci. Edu. Tech. 16, 395-400 (2007).

[2] Geisert, R. & Futrell, C. J., Teacher, computer and curriculum-micro computer in the classroom, (Allyn and Bacon, Boston, 1990).

[3] Faughn, J. S., Serway, R. A., Vuille, C. and Bennett, C. A., Serway's College Physics, (Thompson Brooks/Cole, Belmont, 2006), p. 461.

[4] Arons, A. B. (1990). A Guide to Introductory Physics Teaching. New York: John Wiley & Sons Inc.

[5] Bao, L., and Redish, E. F. Model Analysis Method: Assessing the Dynamics of Student Learning., submitted for publication, Cognition and Instruction, 2001.

[6] A. A. diSessa, Towards an epistemology of physics, Cogn. Instruct. 10, 105 1993.

[7] A. A. diSessa, What do "just plain folk" know about physics?, in Handbook of Education and Human Development: New Models of Learning, Teaching, and Schooling, edited by D. R. Olson and N. Torrance Blackwell Publishers, Ltd., Oxford,639 1996.639

[8] L. Bao, Dynamics of student modeling: A theory, algorithms, and application to quantum mechanics, in Physics University of Maryland, College Park, MD, 1999.

[9] P. G. Hewitt, Conceptual Physics, 8th ed. Addison-Wesley, Reading, MA, 1998, pp. 321–366.639

[10] G. Fauconnier and M. Turner, The Way We Think: Conceptual Blending and the Mind's Hidden Complexities BasicBooks, New York, NY, 2002.

[11] Z. Hrepic, D. Zollman, and S. Rebello, Eliciting and Representing Hybrid Mental Models, in Proceedings of Annual Meeting of the National Association for Research in Science Teaching, 2005, Dallas, TX.639

[12] Spillane JP, Diamond JB, Walker LJ, Halverson R, Jita L (2001) Urban school leadership for elementary science instruction: identifying and activating resources in an undervalued schools subject. J Res Sci Teach 38:918–940.

[13] Tashakkori A, Teddlie C (1998) Mixed methodology: combining qualitative and quantitative approaches, vol 46. Sage Publications, Thousand Oaks.

[14] Warren PS, Katti M, Ermann M, Brazel A (2006) Urban bioacoustics: it's not just noise. Anim Behav 71:491–502.

[15] Wenglinsky H, Educational Testing Service (2000) How teaching matters: bringing the classroom back into discussions of teacher quality. Educational Testing Service and the Milken Family Foundation, Princeton.